DA 0020, DA 0050, DA 0200, DA 0500
DA 1500, DA 3000, DA 6000

All PTM-actuators are based on the rack- and pinion principle, picture 2.

This fact is responsible for small dimensions. For different mounting alternatives all PTM-actuators can be mounted on three or four mounting surfaces.

Rotation angles more than 185° are available.

Our progressive working end position damping starts working just about 10° before reaching the end position by throttling the exhaust air automatically. This guarantees reaching the exact end position. This excludes bouncing in the end position even during air pressure variation.

A technically necessary backlash of 0,5° is unvoidable at Mini-Actuators with rack-and pinion principle.

Main characteristics of our actuators are small dimensions, low weight and long lifetime. The power transmission is placed in the centerline of the rack piston to guarantee a very long lifetime. There are PTM-actuators which were returned for repair only after 13 years of continuous running.

The smallest Pneumatic Mini Actuator DA 0020 with rotation angle of 95° and a torque of 20 Ncm, has the dimensions of only 20x20x43 mm and a weight of 0,050 kg. These small dimensions and weights allow you to increase the performance-weight ratio of your robot or other applications.

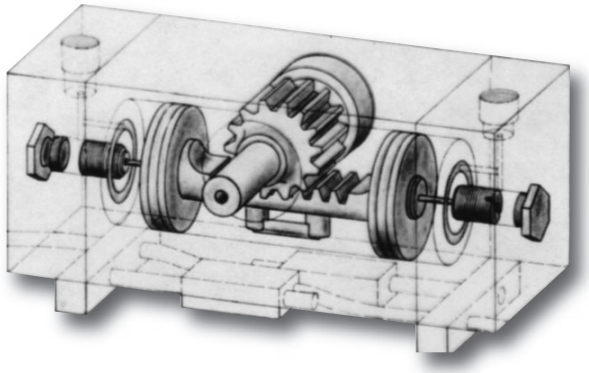

picture 2

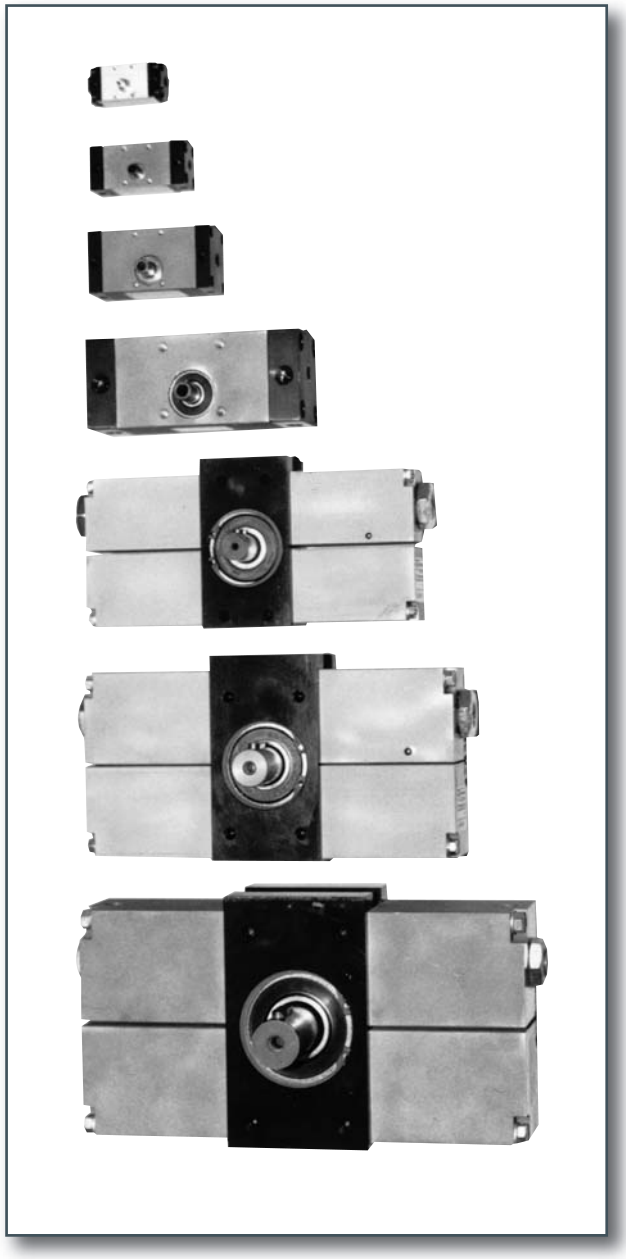

Brief technical data

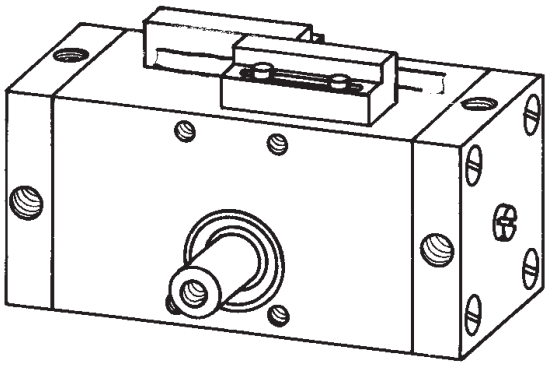

Material:	– aluminum hard or black anodized – steel parts of stainless material or corrosion resistant – short time gas nitration
Operation / mounting position:	– any position desired
Operating temperature:	– -10° to +80° C (14° to 176° F)
Operating media:	– filtered oiled or filtered oil-free air – **Attention**: Only oil-free air should be used at low rotation speed to guarantee smooth movement.
Maintenance:	– all PTM Pneumatic Actuators are maintenance-free.
Operating pressure:	– maximum 8 bar = 118 psi (specs are based on 6 bar = 88 psi)
Rotation angle:	– rotation angle max. 365°, 185° and 95° – adjustable until -20° in total by adjustment screws
Shaft-hub connection:	– if possible use keyway/key, if not use Loctite 601 for mounting of smaller masses on the shaft – combination of clamping with set screw and Loctite 601 (avoid under all circumstances boring the shaft) – shrink or press fit h6/P5 or R6 – clamping unit „Rfn 8006“ from Ringfeder Corporation
End position control with LED:	– please consult our sheet „end position control“ on page 44
End position damping:	– progressive damping characteristics, the angle remains adjustable
End position:	– the technically necessary backlash (until model DA 0500) must be eliminated by external stops when highly accurate end positions are required. This is also possible with an external stop on a second shaft.
Installation recommendation:	– to ensure long life of our devices the use of throttle valves is highly recommended.

DA 0020, DA 0050, DA 0200, DA 0500

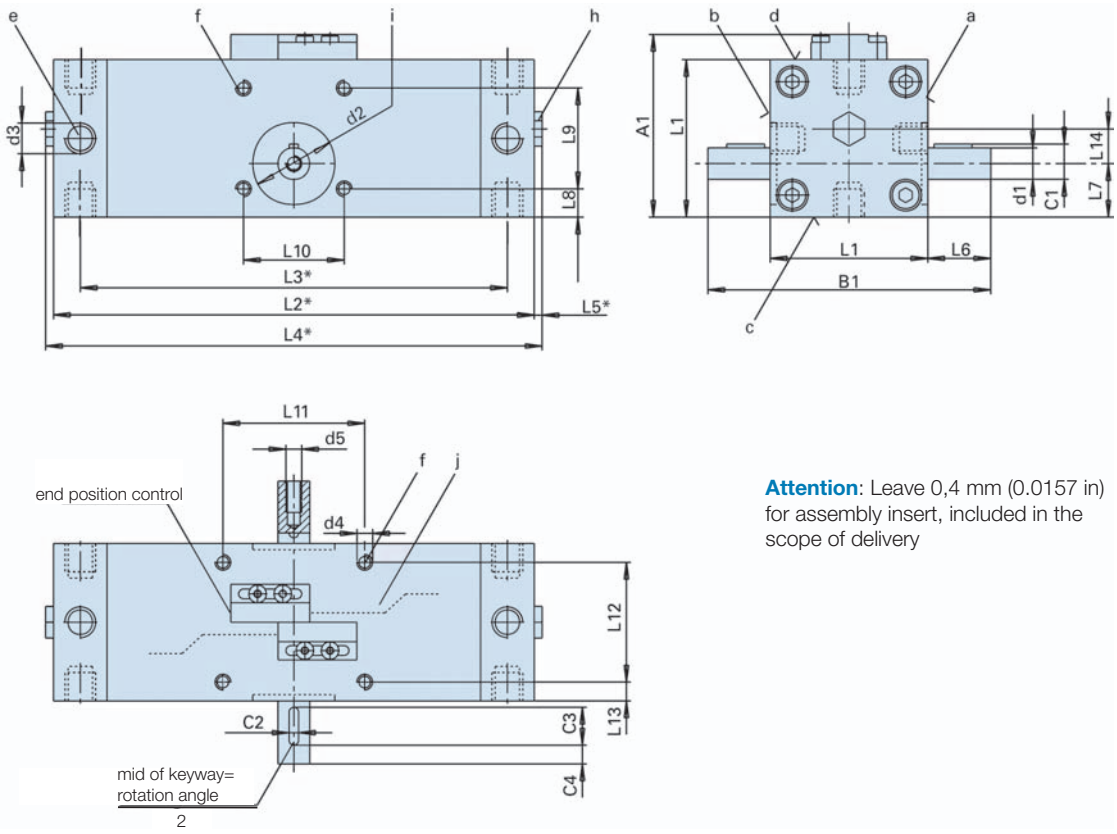

Attention: Leave 0,4 mm (0.0157 in) for assembly insert, included in the scope of delivery

a, b, c	mounting surface for model DA 0020, DA 0050, and DA 0200
a, b, c, d	mounting surface for model DA 0500
e	4 threaded holes per head plate for air connection and mounting alternatives
f	4 threaded holes for model DA 0020, DA 0050 and DA 0200 on side a and b for mounting alternatives 4 threaded holes for model DA 0500 on side a, b, c, d for mounting alternatives
h	adjustment screw to limit the rotation angle (model with end position damping under cover screw)
i	centre bore
j	connection cable for end position control
*	model with or without end position damping
A	model with end position control
B	model with 2 shaft ends
C	model with keyway/key

Ordering Code

DA 0020 - XXX - X - X
DA 0050 - XXX - X - X
DA 0200 - XXX - X - X
DA 0500 - XXX - X - X

torque at 6 bar in Ncm — rotation angle

0 = basic model
1 = with end position control
2 = with end position damping
3 = with 1and 2

0 = 1 shaft end straight
4 = 2 shaft ends straight

0 = 1 shaft end straight, basic model
1 = 1 shaft end with keyway/key
2 = 2 shaft ends/ 1 straight, 1 side with keyway/key
3 = 2 shaft ends, 2 x keyway/key
4 = 2 shaft ends straight

Ordering Example

you order:
DA 0500 - 185 - 2 - 1

we deliver:
Pneumatic Actuator model DA 0500
with rotation angle max. 185°
with end position damping
1 shaft end with keyway/key

All dimensions in mm

DA	0020-095	0020-185	0020-365	0050-095	0050-185	0050-365
rotation angle	95°	185°	365°	95°	185°	365°
ø d1	4 h6	4 h6	4 h6	6 h6	6 h6	6 h6
ø d2	7 J7x0,5	7 J7x0,5	7 J7x0,5	10 J7x0,5	10 J7x0,5	10 J7x0,5
d3	M5x4	M5x4	M5x4	M5x4,5	M5x4,5	M5x4,5
d4	M3x4	M3x4	M3x4	M3x5	M3x5	M3x5
d5	M3x5,5	M3x5,5	M3x5,5	M3x5,5	M3x5,5	M3x5,5
L1	20	20	20	25	25	25
L2 without end position damping	43,3 +0,4 -0,6	52,8 +0,4 -0,6	67,4 +0,4 -0,6	55,2 +0,4 -0,6	67,2 +0,4 -0,6	92,2 +0,4 -0,6
L2 with end position damping	58,1 +0,4 -0,6	67,6 +0,4 -0,6	82,2 +0,4 -0,6	70,0 +0,4 -0,6	82,0 +0,4 -0,6	107,0 +0,4 -0,6
L3 without end position damping	35,3 +0,2 -0,4	44,8 +0,2 -0,4	59,4 +0,2 -0,4	47,2 +0,2 -0,4	59,2 +0,2 -0,4	84,2 +0,2 -0,4
L3 with end position damping	47,3 +0,4 -0,2	56,8 +0,4 -0,2	71,4 +0,4 -0,2	59,2 ±0,4	71,2 ±0,4	96,2 ±0,4
L4 without end position damping	—	—	—	—	—	—
L4 with end position damping	63,7 +0,6 -0,8	73,2 +0,6 -0,8	87,8 +0,6 -0,8	75,6 +0,6 -0,8	87,6 +0,6 -0,8	112,6 +0,6 -0,8
L5 without end position damping	—	—	—	—	—	—
L5 with end position damping	2,8	2,8	2,8	2,8	2,8	2,8
L6	10	10	10	9	9	9
L7	7,5	7,5	7,5	8,5	8,5	8,5
L8	2	2	2	3	3	3
L9	16	16	16	19	19	19
L10	10	10	10	14	14	14
A1	29,5 ±0,5	29,5 ±0,5	29,5 ±0,5	33 ±0,4	33 ±0,4	33 ±0,4
B1	40	40	40	43	43	43
C1	—	—	—	6,8	6,8	6,8
C2	—	—	—	2 N9	2 N9	2 N9
C3	—	—	—	6	6	6
C4	—	—	—	2	2	2
F_A axial N	20	20	20	55	55	55
C_O radial N	90	90	90	220	220	220
weight in kg	0,050	0,060	0,075	0,10	0,12	0,15
compressed air/stroke in cm^3	0,7	1,4	2,8	1,6	3,2	6,4

DA	0200-095	0200-185	0200-365	0500-095	0500-185	0500-365
rotation angle	95°	185°	365°	95°	185°	365°
ø d1	8 h6	8 h6	8 h6	10 h6	10 h6	10 h6
ø d2	16 J7x0,5	16 J7x0,5	16 J7x0,5	26 J7x0,8	26 J7x0,8	26 J7x0,8
d3	M5x5,5	M5x5,5	M5x5,5	R1/8x8	R1/8x8	R1/8x8
d4	M3x7	M3x7	M3x7	M5x11	M5x11	M5x11
d5	M4x9	M4x9	M4x9	M5x10	M5x10	M5x10
L1	35	35	35	50	50	50
L2 without end position damping	70,2 +0,4 -0,6	89,2 +0,4 -0,6	127,2 +0,4 -0,6	120,2 +0,4 -0,6	153,2 +0,4 -0,6	219,2 +0,4 -0,6
L2 with end position damping	85,0 +0,4 -0,6	104,0 +0,4 -0,6	142,0 +0,4 -0,6	124,0 +0,4 -0,6	157,0 +0,4 -0,6	223,0 +0,4 -0,6
L3 without end position damping	62,2 +0,2 -0,4	81,2 +0,2 -0,4	119,2 +0,2 -0,4	103,2 +0,2 -0,4	136,2 +0,2 -0,4	202,2 +0,2 -0,4
L3 with end position damping	74,2 ±0,4	93,2 ±0,4	131,2 ±0,4	108,2 ±0,4	141,2 ±0,4	207,2 ±0,4
L4 without end position damping	—	—	—	—	—	—
L4 with end position damping	90,6 +0,6 -0,8	109,6 +0,6 -0,8	147,6 +0,6 -0,8	129,6 +0,6 -0,8	162,6 +0,6 -0,8	228,6 +0,6 -0,8
L5 without end position damping	—	—	—	—	—	—
L5 with end position damping	2,8	2,8	2,8	2,8	2,8	2,8
L6	15	15	15	20	20	20
L7	11,5	11,5	11,5	17	17	17
L8	3,5	3,5	3,5	7	7	7
L9	28	28	28	36	36	36
L10	15	15	15	32	32	32
L11	—	—	—	45	45	45
L12	—	—	—	38	38	38
L13	—	—	—	6	6	6
L14	—	—	—	11	11	11
A1	43 ±0,4	43 ±0,4	43 ±0,4	58 ±0,4	58 ±0,4	58 ±0,4
B1	65	65	65	89,8	89,8	89,8
C1	8,8	8,8	8,8	11,2	11,2	11,2
C2	2 N9	2 N9	2 N9	3 N9	3 N9	3 N9
C3	8	8	8	12	12	12
C4	5	5	5	6	6	6
F_A axial N	180	180	180	470	470	470
C_O radial N	770	770	770	1900	1900	1900
weight in kg	0,25	0,33	0,4	0,8	1,0	1,3
compressed air/stroke in cm^3	6,4	11,9	23,5	13,9	27,2	53,7

DA 1500, DA 3000, DA 6000

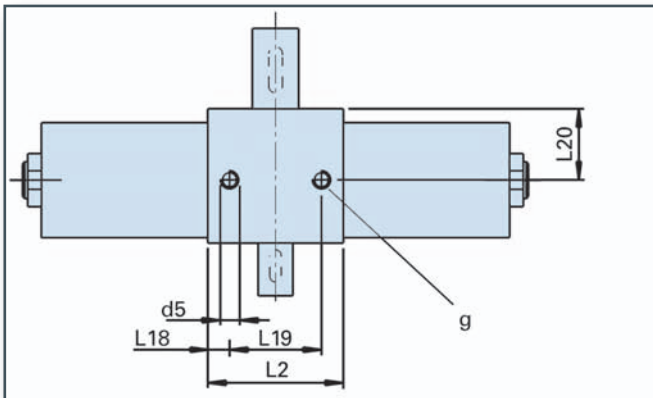

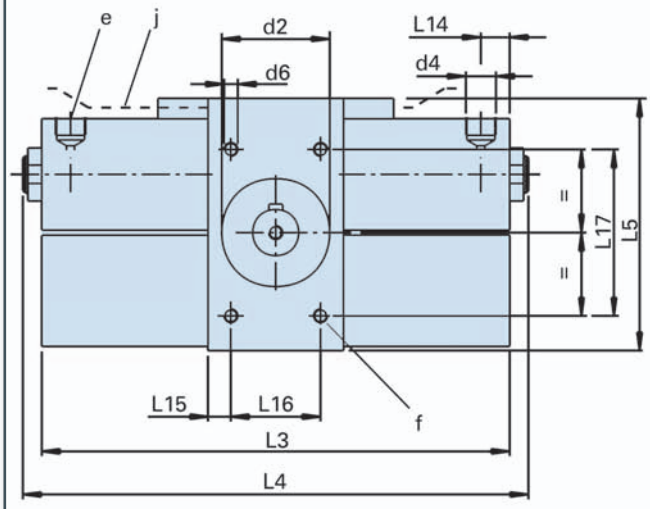

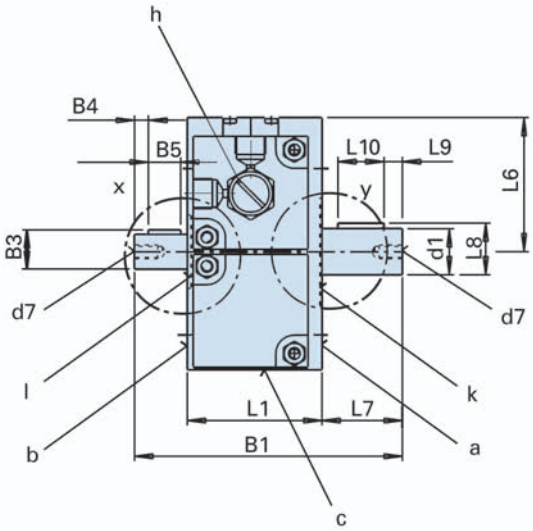

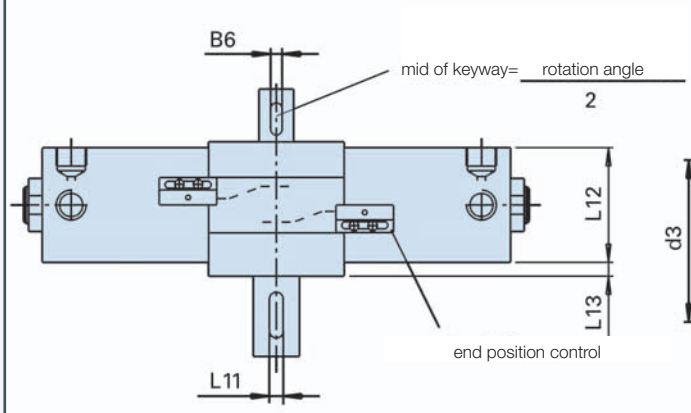

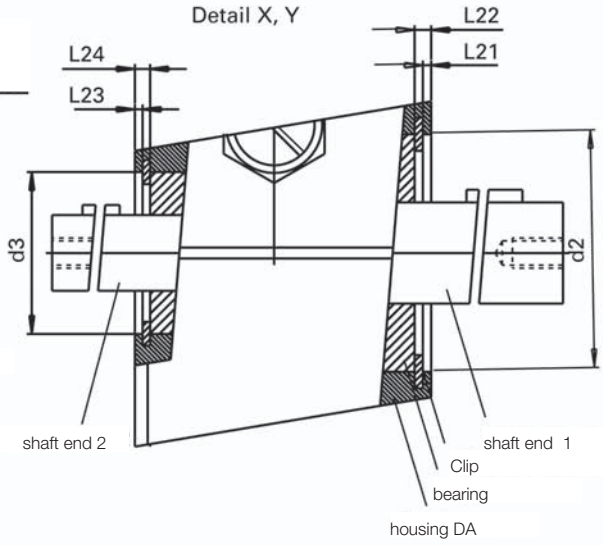

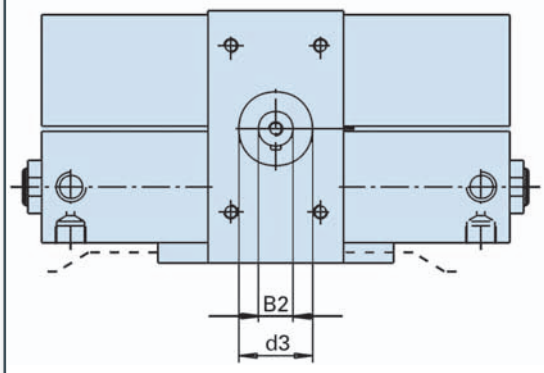

a, b, c mounting surface
e air connections
f mounting alternatives on side a and b
g mounting alternatives on side c
h adjustment screw to limit the rotation angles
j connection cable for end position control
k centre bore
l centre bore

B model with 2 shaft ends

DA	1500-095	1500-185	1500-365	3000-095	3000-185	3000-365	6000-095	6000-185	6000-365
rotation angle	95°	185°	365°	95°	185°	365°	95°	185°	365°
ø d1	15 h6	15 h6	15 h6	20 h6	20 h6	20 h6	25 h6	25 h6	25 h6
ø d2	42 J7	42 J7	42 J7	47 J7	47 J7	47 J7	62 J7	62 J7	62 J7
ø d3	28 J7	28 J7	28 J7	32 J7	32 J7	32 J7	47 J7	47 J7	47 J7
d4	R1/8x9	R1/8x9	R1/8x9	R1/4x9	R1/4x9	R1/4x9	R1/4x9	R1/4x9	R1/4x9
d5	M8x9	M8x9	M8x9	M8x9	M8x9	M8x9	M10x12	M10x12	M10x12
d6	M6x10	M6x10	M6x10	M6x10	M6x10	M6x10	M8x13	M8x13	M8x13
d7	M4x6	M4x6	M4x6	M6x10	M6x10	M6x10	M8x12	M8x12	M8x12
L1	49	49	49	58,5	58,5	58,5	76	76	76
L2	49	49	49	59	59	59	76	76	76
L3	183,6	237	343,8	203,6	264,8	387,4	241	321	485
L4	200	253,4	360,2	220	281,2	403,8	257,4	337,4	501,4
L5	91,5	91,5	91,5	109,9	109,9	109,9	133	133	133
L6	48,9	48,9	48,9	58,5	58,5	58,5	69	69	69
L7	23	23	23	35	35	35	50	50	50
L8	17	17	17	22,5	22,5	22,5	28	28	28
L9	6	6	6	8	8	8	10	10	10
L10	14	14	14	20	20	20	25	25	25
L11	5 N9	5 N9	5 N9	6 N9	6 N9	6 N9	8 N9	8 N9	8 N9
L12	40x40	40x40	40x40	50x50	50x50	50x50	60x60	60x60	60x60
L13	7	7	7	6	6	6	8	8	8
L14	12,5	12,5	12,5	12,5	12,5	12,5	12,5	12,5	12,5
L15	12,5	12,5	12,5	10	10	10	13	13	13
L16	24	24	24	39	39	39	50	50	50
L17	72,5	72,5	72,5	72,5	72,5	72,5	100	100	100
L18	8,5	8,5	8,5	9,5	9,5	9,5	13	13	13
L19	32	32	32	40	40	40	50	50	50
L20	27	27	27	31	31	31	38	38	38
L21	1	1	1	1	1	1	2,15	2,15	2,15
L22	3	3	3	3	3	3	5,1	5,1	5,1
L23	1,2	1,2	1,2	1,7	1,7	1,7	2,2	2,2	2,2
L24	2,6	2,6	2,6	3,1	3,1	3,1	4,2	4,2	4,2
B1	92	92	92	116,5	116,5	116,5	161	161	161
ø B2	12 h6	12 h6	12 h6	15 h6	15 h6	15 h6	20 h6	20 h6	20 h6
B3	13,5	13,5	13,5	17	17	17	22,5	22,5	22,5
B4	5	5	5	6	6	6	8	8	8
B5	12	12	12	14	14	14	20	20	20
B6	4 N9	4 N9	4 N9	5 N9	5 N9	5 N9	6 N9	6 N9	6 N9
F_A axial N	550	550	550	1000	1000	1000	5000	5000	5000
C_O radial N	2200	2200	2200	6550	6550	6550	10000	10000	10000
weight in kg	1,56	1,9	2,2	2,7	3,2	4,5	4,6	5,5	7,2
compressed air/stroke in cm^3	22,6	44,1	87,1	44,7	87,2	172,0	91,5	178,1	351,6

All dimensions in mm

Ordering Code

DA 1500-XXX-X-X
DA 3000-XXX-X-X
DA 6000-XXX-X-X

torque at 6 bar in Ncm — rotation angle

0 = basic model
1 = with end position control (sheet "end position control")
2 = with end position damping
3 = with 1 and 2

1 = 1 shaft end (d1) basic model
3 = 2 shaft ends (B2)

Ordering Example

you order:
DA 1500-095-0-1

we deliver:
Pneumatic Actuator model DA 1500
with rotation angle 95°
basic model, with 1 shaft end